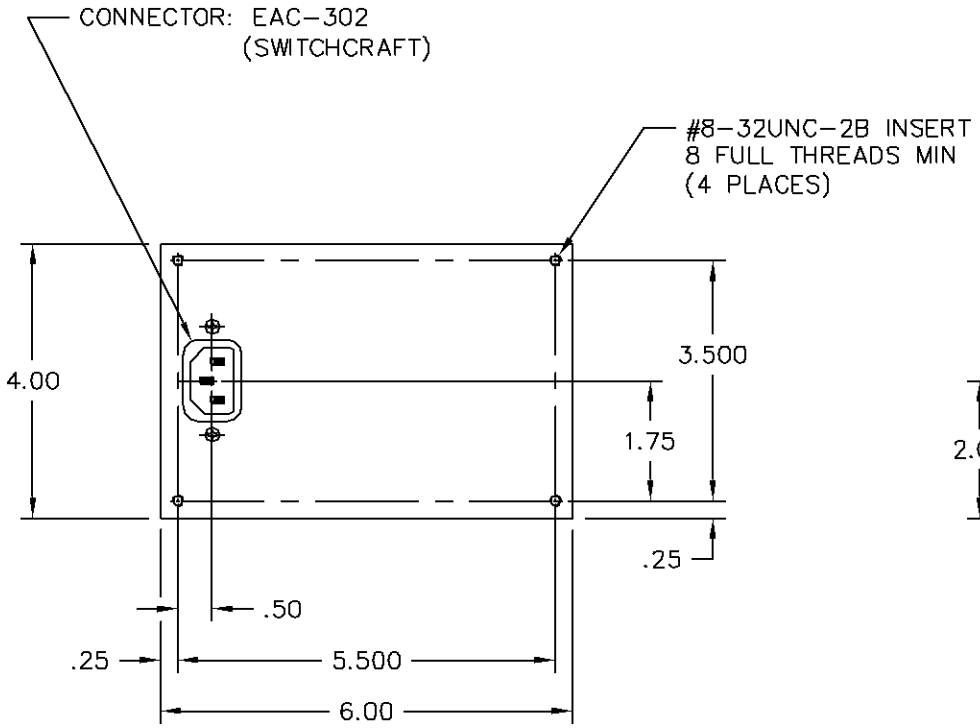

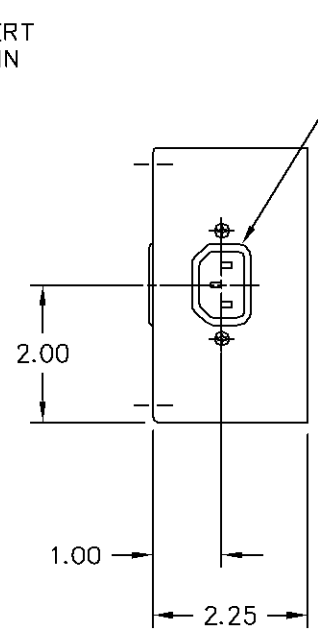

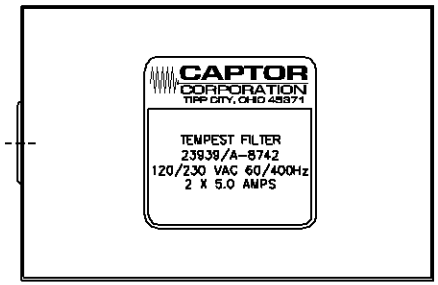

REV.	REVISION RECORD	BY	DATE

CAPTOR CORPORATION
TIPP CITY, OHIO

TOLERANCES
.X = ± .100
.XX = ± .030
.XXX = ± .010
UNLESS OTHERWISE NOTED

DR. DB
CH.
ENG. NM
DATE 6/23/06

TITLE OUTLINE
SCALE 1/2
SIZE B
PART NO. A-8742